52 13 001 **Removing and installing front seat, driver's side (normal / manual)**

Necessary preliminary tasks:

- Disconnect battery earth lead
- Remove head restraint

Important!

An airbag module and a pyrotechnical seat belt tensioner are installed in the front seat.

Improper handling can lead to triggering of the pyrotechnical seat belt tensioner or side airbag, resulting in injuries.

Installation note:

- Powerlok screws must be replaced and must not be reused
- Powerlok screws are mechanical screw locks with trilobular threads

Move backrest to full rearward position.

Grip end fitting cover in marked area between cushion and cover.

Unclip end fitting cover in direction of arrow (1).

cardiagn.com

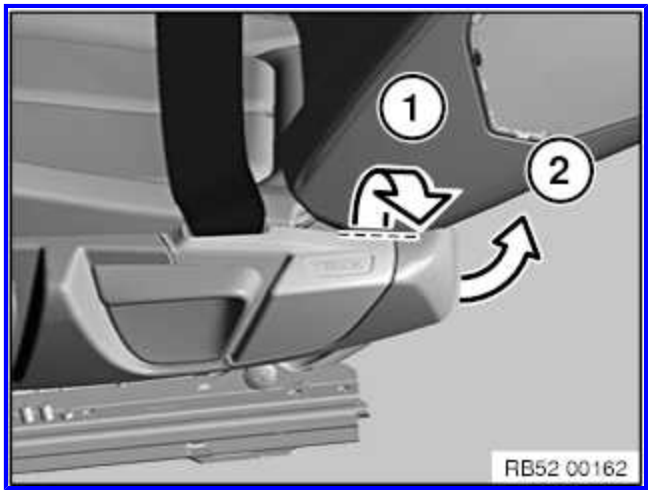

Feed out end fitting cover (2) in direction of arrow.

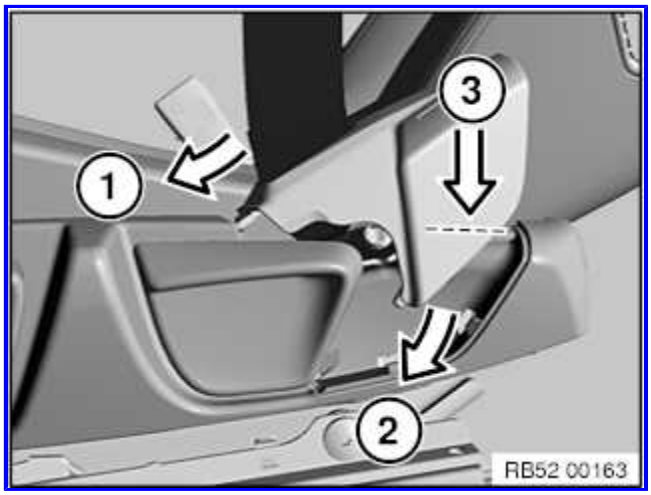

Installation note:
Install end fitting cover as follows:

1. Insert cover with front guide in cover
2. Insert cover in direction of arrow downwards in covering
3. Engage top cover in marked area in covering.

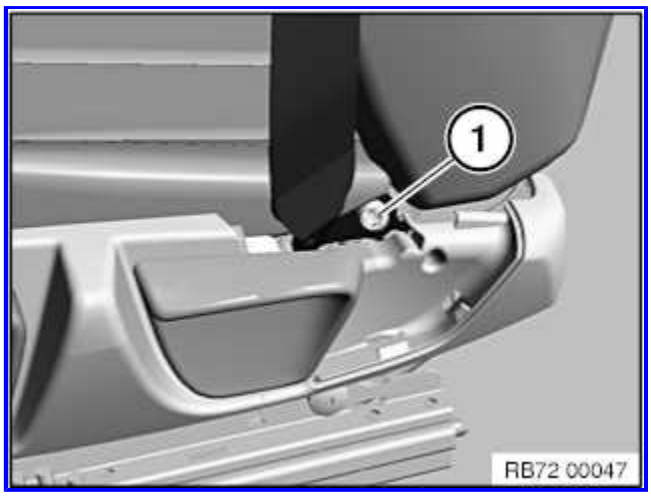

Release screw (1).

Tightening torque: 72 11 02AZ.

Remove end fitting.

Installation note:
End fitting is coded against incorrect assembly.

Move seat to upper back position.

Release and dispose of screws (1).

cardiagn.com

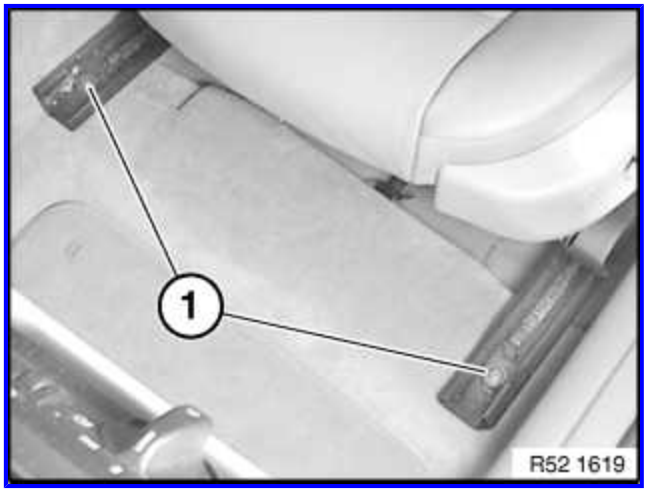

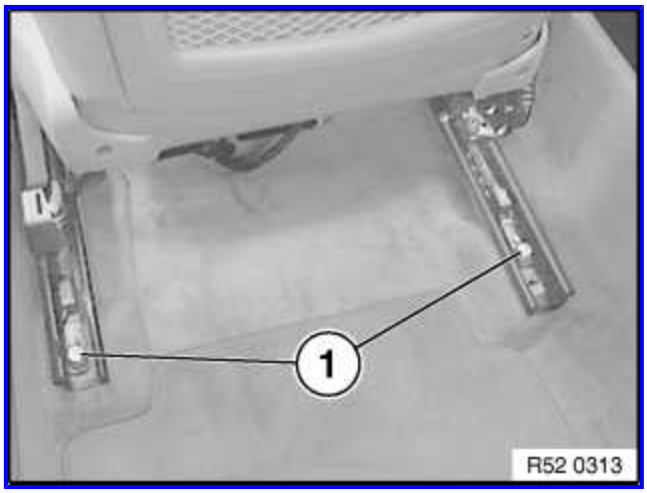

Adjust the seat to the front top.

Release and dispose of screws (1).

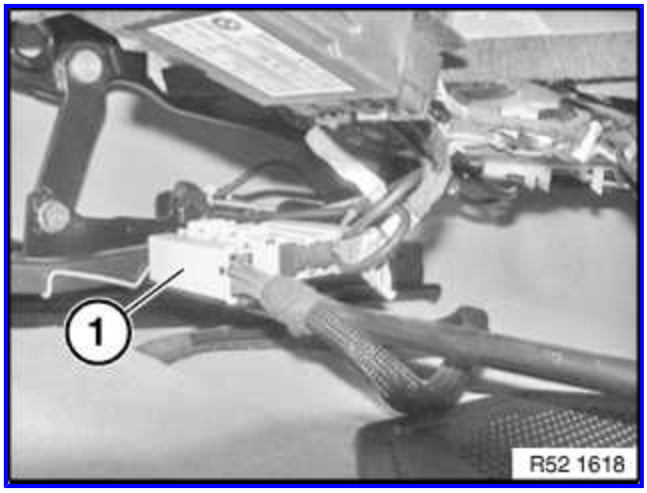

Disconnect plug connection (1).

Important!

Cover door sill with protective covers (risk of damage).

Lift out front seat.

Installation note:

- Carpet must not get between seat rails and floor panel in area of attachment points (squeaking noises)
- Replace microencapsulated screws
- Insert all screws loose to avoid twisting
- Tighten down all screws to specified torque

cardiagn.com

Tightening torque 52 10 01AZ.

Warning!

When carrying out further work on the front seat, it is absolutely imperative to observe the safety regulations on handling airbag modules and pyrotechnical seat belt tensioners

Improper handling can lead to triggering of the pyrotechnical seat belt tensioner or side airbag, resulting in injuries.

cardiagn.com